EPSON

Watch Movement Parts List and Disassemble Guide

Cal.VX3YE

MULTI-FUNCTION
- Date

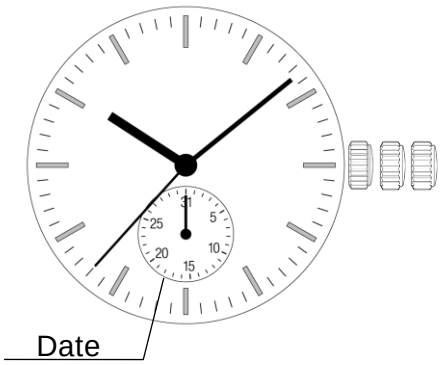

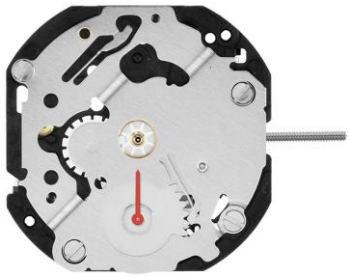

MOVEMENT SPECIFICATIONS

Movement Size	10 1/2”’	**Height**	3.05mm
Casing Diameter	Ø 23.3mm	**Battery Life**	3 years

Cal.VX3YE Parts List ／零件一覧表

No.	PARTS NAME	CHINESE(简体字)	Qty	VX3YE1
(1)	Screw(A)	螺丝	2	0022 222
(2)	Calendar cover (A)	日历夹板	1	0839 504
(3)	Date star wheel	日历星轮	1	0970 538
(5)	Date driving wheel	日历推动轮	1	0802 504
(8)	Date corrector setting wheel	日历修正轮	1	0804 570
(9)	6th date corrector setting transmission wheel	第六日历修正传动轮	1	0817 570
(10)	Screw(A)	螺丝	2	0022 222
(11)	Hour wheel guard	时轮夹板	1	0376 502
(12)	5th date corrector setting transmission wheel	第五日历修正传动轮	1	0737 909
(13)	2nd date corrector setting transmission wheel	第二日历修正传动轮	1	0962 909
(14)	3rd date corrector setting transmission wheel	第三日历修正传动轮	1	0962 909
(15)	4th date corrector setting transmission wheel	第四日历修正传动轮	1	0962 909
(16)	Hour wheel	时轮	1	0271 563
(17)	Battery	电池	1	3013 140
(18)	Screw(B)	螺丝	2	0022 247
(19)	Battery connection（+）	正极片	1	4268 730
(20)	Circuit block	电路板	1	4000 760
(21)	Train wheel bridge	轮列夹板	1	0125 904
(22)	Fourth wheel	四号轮	1	0241 528
(23)	Third wheel & pinion	三号轮	1	0231 904
(24)	Fifth wheel & pinion	五号轮	1	0701 904
(25)	Rotor	转子	1	4146 890
(26)	Minute wheel & pinion	度数轮	1	0261 908
(27)	Setting wheel	拨针轮	1	0281 904
(28)	Train wheel setting lever	轮组止动竿	1	0391 890
(29)	Screw(B)	螺丝	1	0022 247
(30)	Coil block	线圈	1	4002 760
(31)	Stator	定子	1	4239 904
(32)	Setting lever	鸡头	1	0383 891
(33)	Yoke	横担	1	0384 890
(34)	Clutch wheel	猪笼轮	1	0282 890
(35)	Setting stem（standard）	把芯（标准）	1	0351 177
	Setting stem（long）	把芯（长）	1	0351 578
(36)	1st date corrector setting transmission wheel	第一日历修正传动轮	1	0962 890
(37)	Centre wheel & pinion	中心轮	1	0221 575
(38)	Insulator for battery connection(C)	电池绝缘片C	1	4216 904
(39)	Battery connection（-）	负极片	1	4270 904

VX3NE,3PE,3RE,3YE Disassemble Chart (1)

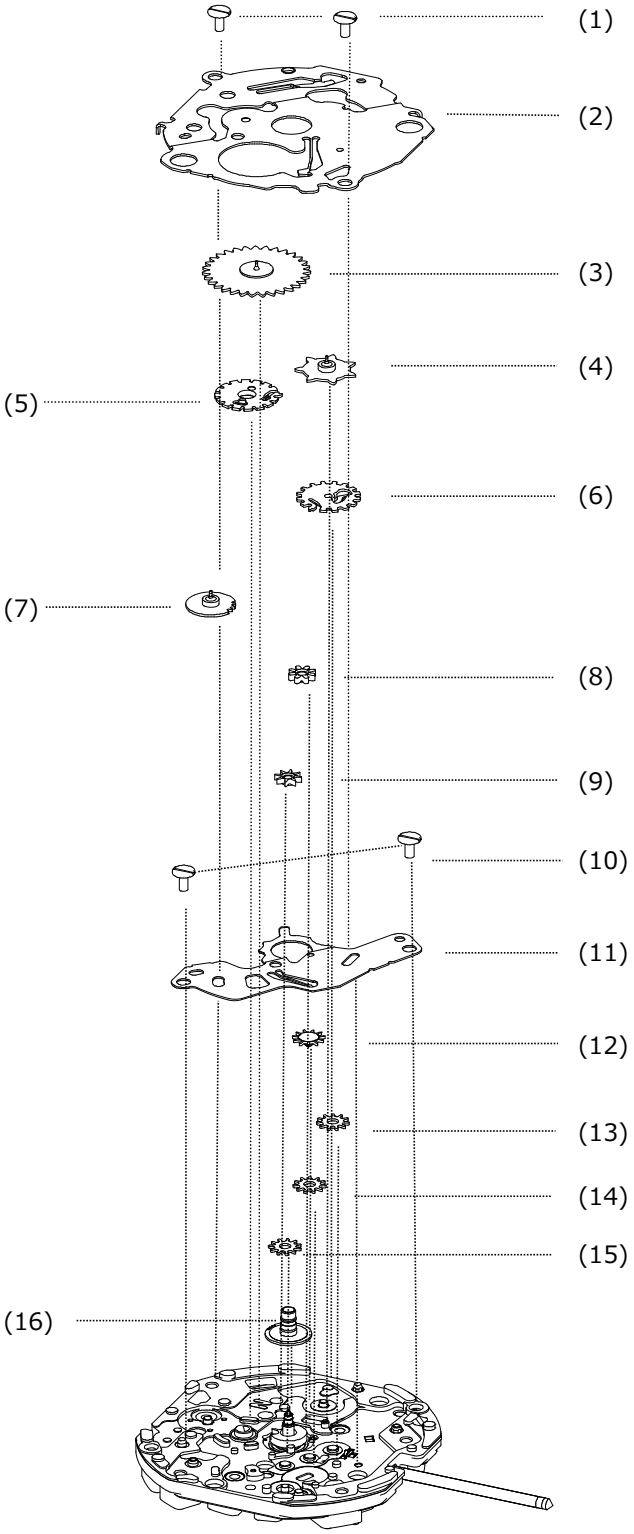

VX3NE,3PE,3RE,3YE Disassemble Chart (2)

